IF IN DOUBT ASK
DO NOT SCALE

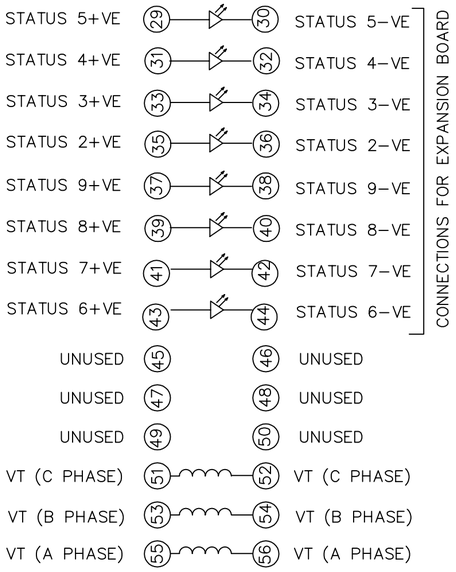

OUTER TERMINAL BLOCK ASSY:–
VIEW BLOCK FROM THE INSIDE FACE

ASSEMBLY INSTRUCTIONS:–

TYPICAL ASSEMBLY DRAWING 2995G10029
AT INDICATED POSITIONS FIT AS FOLLOWS,
S – FIT STANDARD CONTACT
2995B10051
HC – FIT 'HEAVY CURRENT' KIT
2995G10030
WHERE -o o- IS SHOWN FIT
CT SHORTING KIT 2995G10031
POSITIONS SHOWN BLANK ARE UNUSED
ALL POSITIONS FIT SCREW 2106F12506

30	S	S	29
32	S	S	31
34	S	S	33
36	S	S	35
38	S	S	37
40	S	S	39
42	S	S	41
44	S	S	43
46			45
48			47
50			49
52	S	S	51
54	S	S	53
56	S	S	55

CHASSIS TERMINAL BLOCK ASSY:–
VIEW FROM NUMBERED SIDE OF BLOCK

ASSEMBLY INSTRUCTIONS:–

TYPICAL ASSEMBLY DRAWING 2995G10032
AT INDICATED POSITIONS FIT AS FOLLOWS,
T – FIT TRIP ISOLATION CONTACT
2995B10053
S – FIT STANDARD CONTACT
2995B10054
POSITIONS SHOWN BLANK ARE UNUSED

2	T	T	1
4	T	T	3
6	T	T	5
8	T	T	7
10	T	T	9
12	T	T	11
14	T	T	13
16	T	T	15
18	S	S	17
20	S	S	19
22	S	S	21
24	S	S	23
26	S	S	25
28	S	S	27

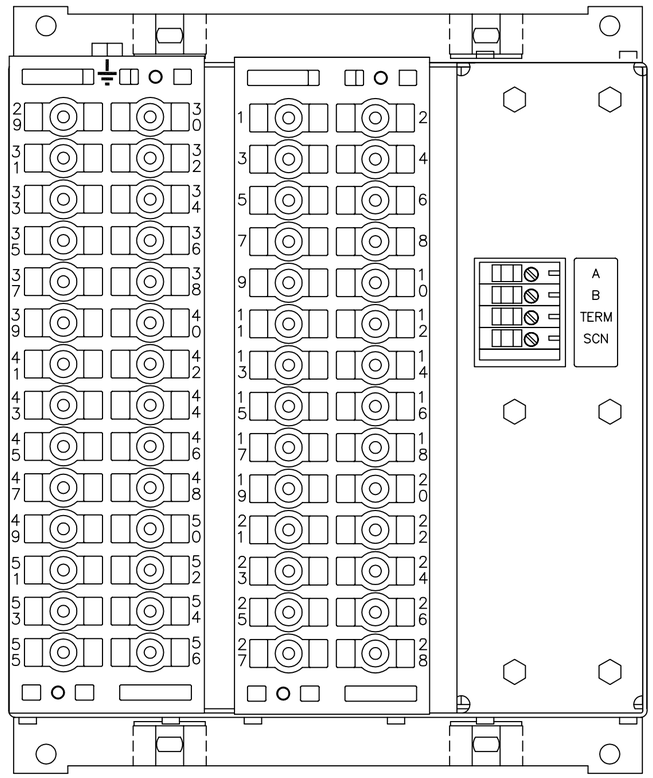

BOX VIEWED FROM REAR

PROTECTION TYPE	SCHEMATIC DIAGRAM OPTION B	SCHEMATIC DIAGRAM OPTION C
PHASE/PHASE	2422W10010 (A3)	2422W10011 (A3)
PHASE/NEUTRAL	2422W10012 (A3)	2422W10013 (A3)

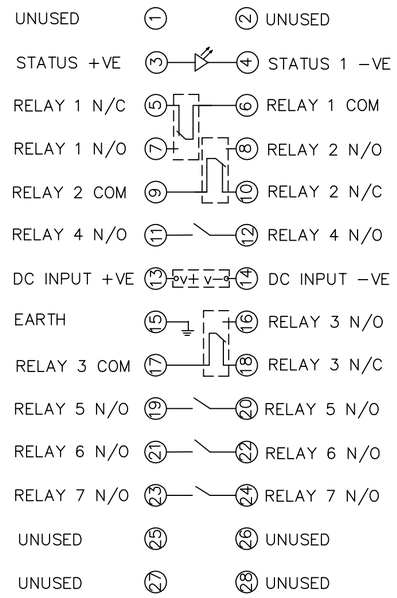

OUTER TERMINAL BLOCK ASSY:–
VIEW BLOCK FROM THE INSIDE FACE

ASSEMBLY INSTRUCTIONS:–

TYPICAL ASSEMBLY DRAWING 2995G10029
AT INDICATED POSITIONS FIT AS FOLLOWS,
S – FIT STANDARD CONTACT
2995B10051
HC – FIT 'HEAVY CURRENT' KIT
2995G10030
WHERE -o o- IS SHOWN FIT
CT SHORTING KIT 2995G10031
POSITIONS SHOWN BLANK ARE UNUSED
ALL POSITIONS FIT SCREW 2106F12506

2			1
4	S	S	3
6	-o o-		5
8	S	S	7
10	-o o-		9
12	S	S	11
14	S	S	13
16	S	S	15
18	-o o-		17
20	S	S	19
22	S	S	21
24	S	S	23
26			25
28			27

NOT SUBJECT TO UPDATE ONCE COPIED / PRINTED OR DOWNLOADED

CHASSIS TERMINAL BLOCK ASSY:–
VIEW FROM NUMBERED SIDE OF BLOCK

ASSEMBLY INSTRUCTIONS:–

TYPICAL ASSEMBLY DRAWING 2995G10032
AT INDICATED POSITIONS FIT AS FOLLOWS,
T – FIT TRIP ISOLATION CONTACT
2995B10053
S – FIT STANDARD CONTACT
2995B10054
POSITIONS SHOWN BLANK ARE UNUSED

2	S	S	1
4	T	T	3
6	S	S	5
8	T	T	7
10	S	S	9
12	T	T	11
14	S	S	13
16	T	T	15
18	S	S	17
20	T	T	19
22	T	T	21
24	T	T	23
26	S	S	25
28	S	S	27

NOTES

1 TERMINALS RECOMMENDED ARE PRE INSULATED & MUST BE CRIMPED USING APPROVED TOOLING.
AMP PIDG OR PLASTI GRIP FUNNEL ENTRY (RING TONGUE) FOR M4 FIXING STUD.

SUPPLIER	AMP	CABLE SIZE
AMP	342103	0.25–1.6 SQ MM
AMP	342143	1.0–2.6 SQ MM.

OR ANY OTHER MANUFACTURERS EQUIVALENT TERMINAL.

2 FOR OUTLINE & DRILLING DRG SEE 2995X10006 (A4).
3 TERMINAL BLOCKS TO BE REFERENCED A & B AS SHOWN.

MATERIAL:

Copyright © 2007 Siemens Protection Devices Ltd. Hebburn

ISSUE	DATE	CHANGE NOTED
1	11/05/07	△

Dimensions in millimetres : Surface texture in micrometres.
Machine where marked ✓
For explanation of dimensions, tolerances, notes etc. see B.S.308.
Limit on untoleranced unmachined dimensions ± _____
Limits on untoleranced machined dimensions to B.S.4500;
i.e. up to 6±0.1; over 30 to 120±0.3; over 315±0.8;
over 6 to 30±0.2; over 120 to 315±0.5;
General unmachined angular tolerance ± _____

Finish:

Treatment:

Title:
TERMINAL IDENTIFICATION & RELAY WIRING DIAGRAM
ARGUS 8 VOLTAGE RELAY 70/P+9SI E6 CASE RS485

SIEMENS PROTECTION DEVICES LTD.

Original Scale. 1:1

First used on:
Similar Articles:
Supersedes:

Drg. No. 2422W50010

DRAWN	CHECKED	APPROVED	DATE	IE	OPS	PCP	Purch.Spec.	TQ	EAC	CE	STD	A2
RDW	RDW	RD.WATSON	11/05/07									

SIEMENS
siemens-russia.com